Emergency Oxygen Inlet Station

2" Recessed Mount Low Pressure

Features:

- Low pressure 2" female NPT connection for high flow
- Lockable, weather-tight enclosure, for outside mounting
- Gauge for display of supply pressure
- Box can be mounted horizontally or vertically by changing front label
- Box available in recessed or surface mounting
- An eight-point terminal block is provided, for connection to the temporary monitoring system
- 3-Piece check valves and brass body relief valves available for installation (must be ordered separately)

General Specifications:

The "Emergency Gaseous Oxygen Inlet Station" shall be an Amico Alert-1 series.

As required by NFPA 99 and CSA Z7396.1, oxygen systems having the source of supply outside the building shall have an inlet to connect a temporary, auxiliary source of supply for emergency or maintenance situations. This connection shall include necessary valves and allows for an emergency supply of oxygen and isolation of the normal source of supply. The inlet connection shall be a 2" female NPT connection and be provided with a plug to prevent entry of foreign matter into the oxygen system when not in use. An eight-point terminal block is provided, for connection to the temporary monitoring system.

A 3-piece, threaded 2" bronze ball valve controls access to the emergency supply and the gauge indicates the pressure being introduced into the oxygen pipeline. Maximum input pressure of 100 psi.

The Emergency Gaseous Oxygen Inlet shall be housed in a weather-tight recessed enclosure.

The enclosure door shall be labeled "Emergency Low Pressure Gaseous Oxygen Inlet" and shall be equipped with a staple for padlocking to allow entry only by authorized personnel. A mounting frame shall extend completely around the enclosure to trim recessed mounting on an exterior wall.

The interior of the enclosure shall be clearly labeled with instructions for connection and operation of the emergency oxygen inlet.

The brass check valves shall be a 3-piece design, with a removable body for servicing without cutting or disassembling of lines. Valves are to be provided with type-K copper extensions for connections on the pipeline, as required for installation in the main and emergency supply pipeline, in accordance with NFPA 99.

A brass body relief valve with the relief pressure set at 75 psi is required for installation in the emergency supply line. The relief valve shall be supplied factory cleaned for oxygen service and shall automatically reset after discharging to provide a positive seal.

All components will be sourced and cleaned for medical gas service. The sealing compound used will be compatible with medical gas service.

Amico products comply with NFPA 99 and CSA Z7396.1.

Technical Specifications

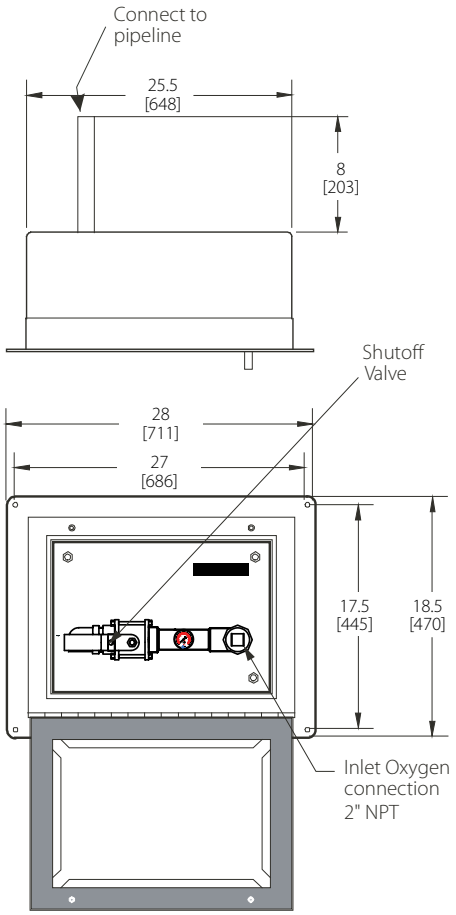

Inch [mm]

Typical Piping

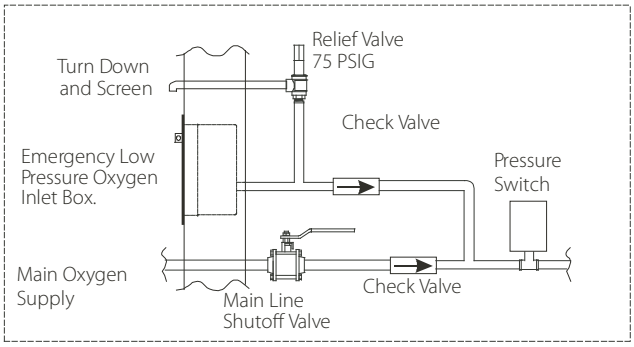

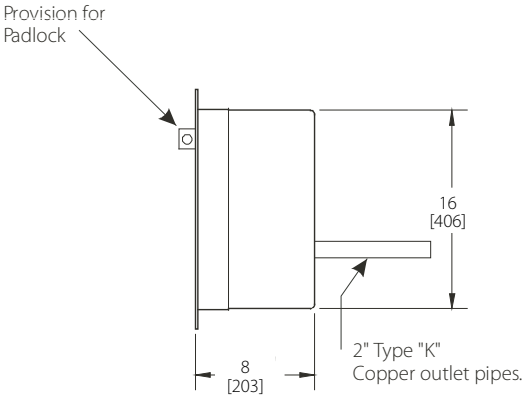

NOTE: The installer is responsable for determining and drilling the position of the wire knockout hole.

Model Numbers

Emergency Low Pressure Oxygen Inlet Station Recessed Wall Mounting:	**M-FILL-OXY-E-LP2**
Optional Check and Relief Valves (to be ordered separately):	
Check Valve 1"	**VV-CHK3-EXT10**
Check Valve 1-1/2"	**VV-CHK3-EXT15**
Check Valve 2"	**VV-CHK3-EXT20**
Relief Valve (NFPA)	**M-X-MAN-72W-075**
Relief Valve (CSA)	**M2-X-MAN-73-075**

Distributed By: