Installation Guide

DL6 - Recessed 6" Downlight

MRI Compatible

Amico Lighting Solutions

Important Safety Instructions

When using electrical equipment, basic safety precautions should always be followed including the following:

Read And Follow All Safety Instructions

1. **Warning:** This luminaire must be installed in accordance with the NEC or your local electrical code. If you are not familiar with these codes and requirements, consult a qualified electrician. *Ce produit doit être installé conformément à NEC ou votre code électrique local. Si vous n'êtes pas familier avec ces codes et ces exigences, veuillez contacter un électricien qualifié.*
2. **Warning:** This equipment is not for use in hazardous combustible atmospheres as defined by the National Electrical Code. *Avertissement: Cet équipement ne doit pas être utilisé dans des atmosphères combustibles dangereuses telles que définies par le Code national de l'électricité.*
3. **Danger**: Risk of shock - Disconnect power before installation. *Danger: Risque de choc – Couper l'alimentation avant l'installation.*
4. Type IC. *Type IC encastré.*
5. Inherently protected. *Protection inhérente.*
6. Use only with Class 2 power unit. *Utiliser uniquement avec une unité de puissance de classe 2.*

Save These Instructions For Future Reference

DL6 Recessed Luminaire

1-07-000158 - 30K Ethernet 1-07-000159 - 30K DC Wiring
1-07-000160 - 35K Ethernet 1-07-000161 - 35K DC Wiring
1-07-000162 - 40K Ethernet 1-07-000163 - 40K DC Wiring

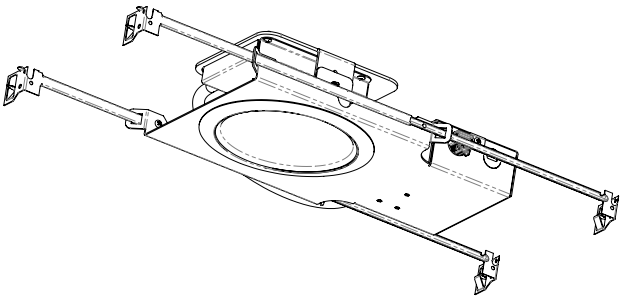

Installation:

Diagram 1

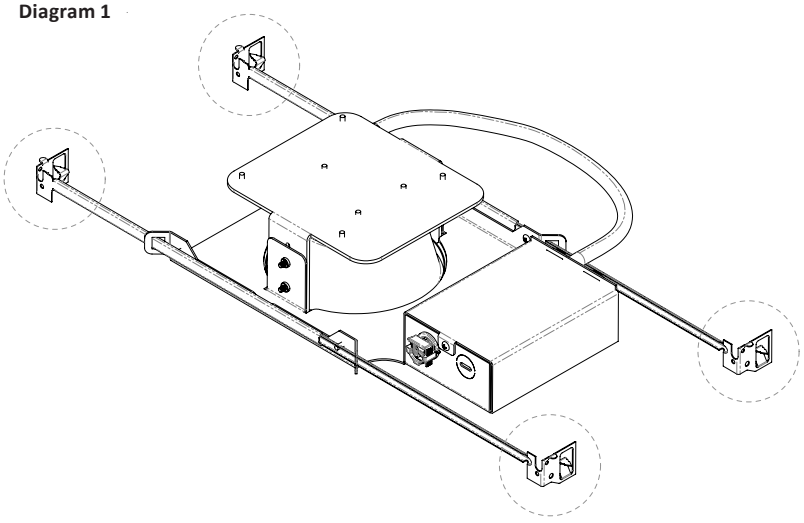

Diagram 2

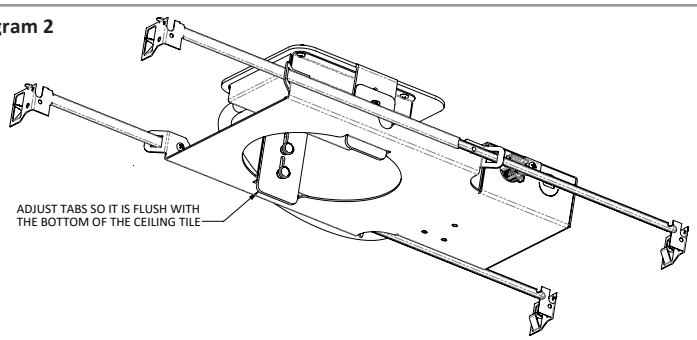

Installation - Suspended Ceiling

Step 1:
Turn off the power supply and remove the ceiling tile.

Step 2:
Remove the reflector from the luminaire housing by removing the two screws from the inner flange and gently pulling the reflector straight down.

Step 3:
Extend bar hangers to fit between the T-Grid and snap/screw into place. See **Diagram 1**.
Note: Bar Hangers for this luminaire are of interlocking design to allow positioning of housing along entire length of bars.

Step 4:
To secure the luminaire mounting frame, position on bar hangers and squeeze tabs to lock into place. See **Diagram 1**.

Step 5:
Locate the center of the proposed opening in the ceiling tile and mark the intended location of the luminaire. Cut an appropriate 6 1/2" diameter opening in the ceiling tile.

Step 6:
Wire the luminaire per the **Electrical Connections** section.

Step 7:
Adjust the tabs to be flush with the ceiling tile and secure using the thumb screws as shown in **Diagram 2**.

Step 8:
Place ceiling tile in T-bar grid aligning the hole of the luminaire with the cut out hole in the ceiling tile.

Step 9:
Replace the reflector removed in **Step 2.**

Diagram 3

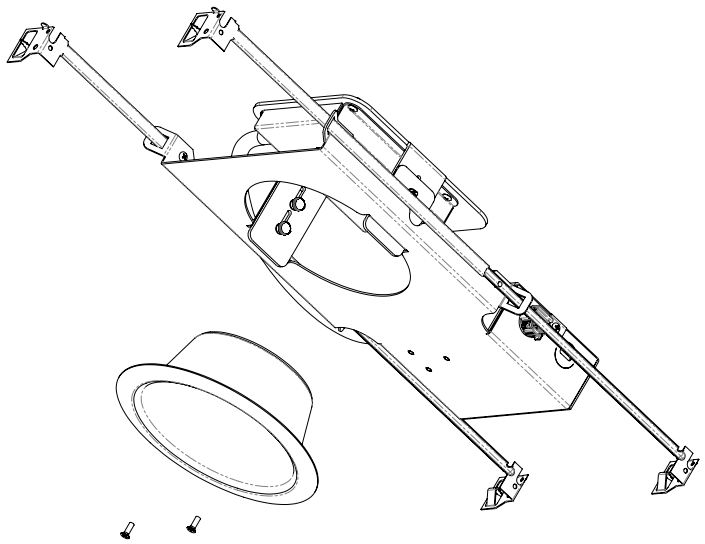

Recessed Can Installation - New Construction (Wood)

Step 1:
Turn off the power supply.

Step 2:
Remove the reflector from the luminaire housing by removing the two screws from the inner flange and gently pulling the reflector straight down.

Step 3:
Extend bar hangers to fit between joists and secure with appropriate hardware (not provided). Hangers should be level with bottom of joists. See **Diagram 1**.

Step 4:
To secure the luminaire mounting frame, position on bar hangers and squeeze tabs to lock in to place. See **Diagram 1**.

Step 5:
Adjust the tabs to be flush with the bottom of the proposed drywall and secure using the thumb screws.

Step 6:
Wire luminaire per **Electrical Connections** section.

Step 7:
Complete the drywall surface as intended.

Step 8:
Replace the reflector removed in **Step 2.**

Electrical Connections

Step 1:
Using customer supplied conduit, cord or Ethernet cable make the following connections with 90°C minimum rated wire connectors.

DC WHITE LIGHT WIRING - 1-07-000006 and 1-07-000037

1. Connect + 24 VDC supply lead to the Red Positive lead.
2. Connect - 24 VDC supply lead to the Black negative lead.

ETHERNET WIRING - 1-07-000005 and 1-07-000039

1. Connect the CAT5, CAT5E or CAT6 Ethernet Cable from the 12/16 Channel Driver to the “In” port in the junction box.
2. Connect the CAT5, CAT5E or CAT6 Ethernet Cable from the “Out” port of the first luminaire to the “In” port of the next Ethernet luminaire.
3. All wires must be terminated to Standard T568B on both ends.
4. Four (4) luminaires maximum per CAT output from 12/16 Channel Driver.

Diagram 4 - Electrical Connections - 1-07-000159, 1-07-000161 and 1-07-000163

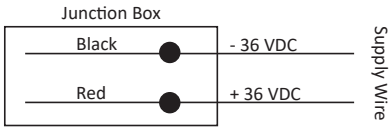

Diagram 5 - Electrical Connections - 1-07-000158, 1-07-000160 and 1-07-000162

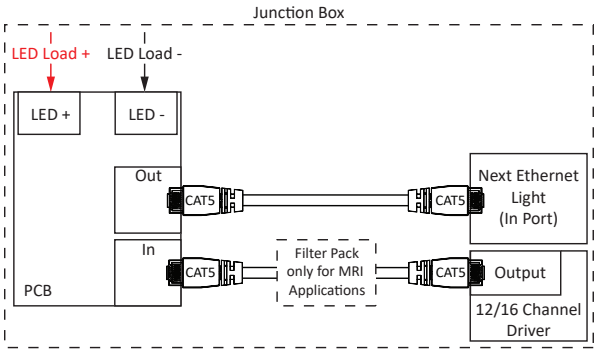

Directive 2012/19/EU (WEEE - Waste Electrical and Electronic Equipment): Information for Users

This product complies with EU Directive 2012/19/EU. The crossed out wheeled bin symbol on the article means that at the end of its useful lifespan, this product must not be disposed of with your other household or municipal waste. This product has required the extraction and use of natural resources for its production. It may contain hazardous substances that could impact health and the environment if not properly disposed. In order to avoid dissemination of those substances in our environment and to diminish the pressure on the natural resources, the user is responsible for delivering the appliance to an appropriate collection facility at the end of its useful lifespan. The separate collection and recycling of your waste equipment at the time of disposal will help conserve natural resources and ensure that it is recycled in a manner that protects human health and the environment. For more information on available collection facilities contact your local waste collection service or the place of purchase.

For informational purposes only. Content is subject to change.