ROTARY VANE - DRY QUADRAPLEX STACK MOUNTED VACUUM SYSTEM (BUSCH)
(1.2 HP - 8.9 HP)

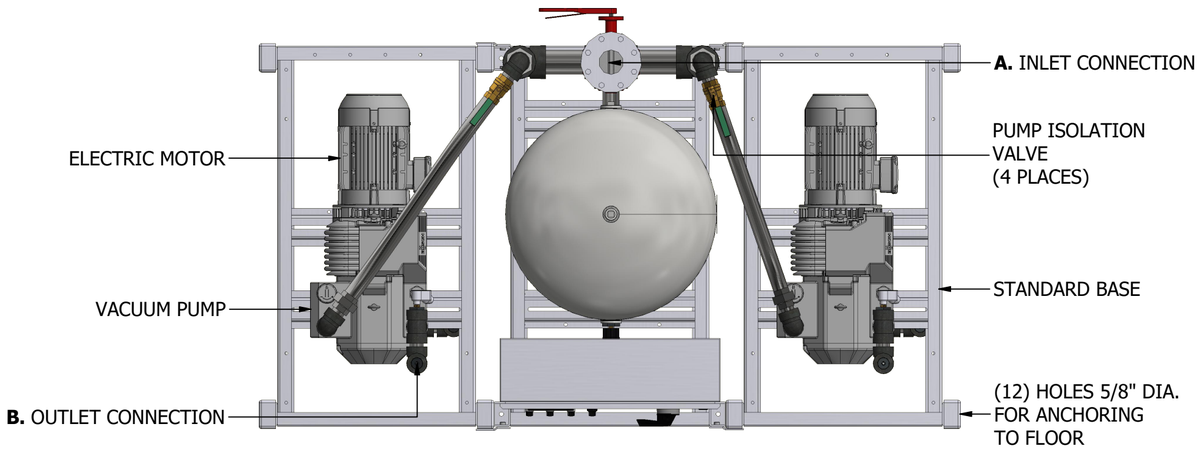

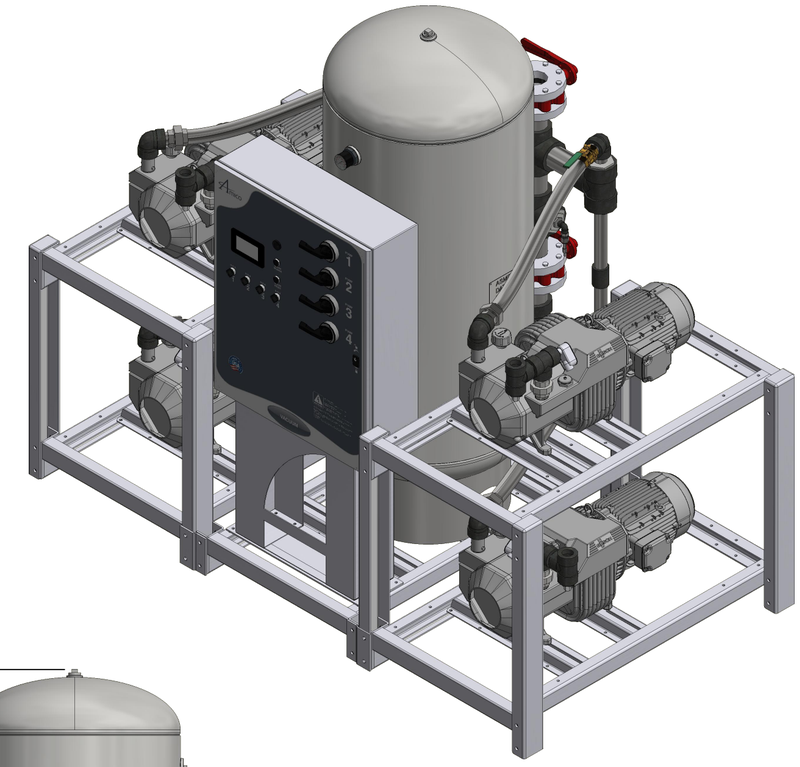

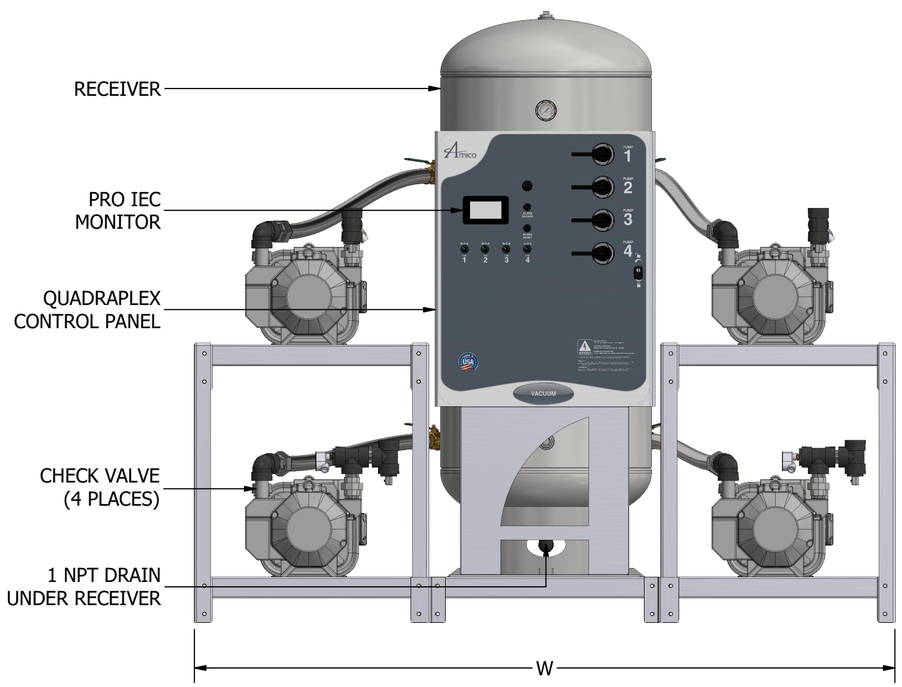

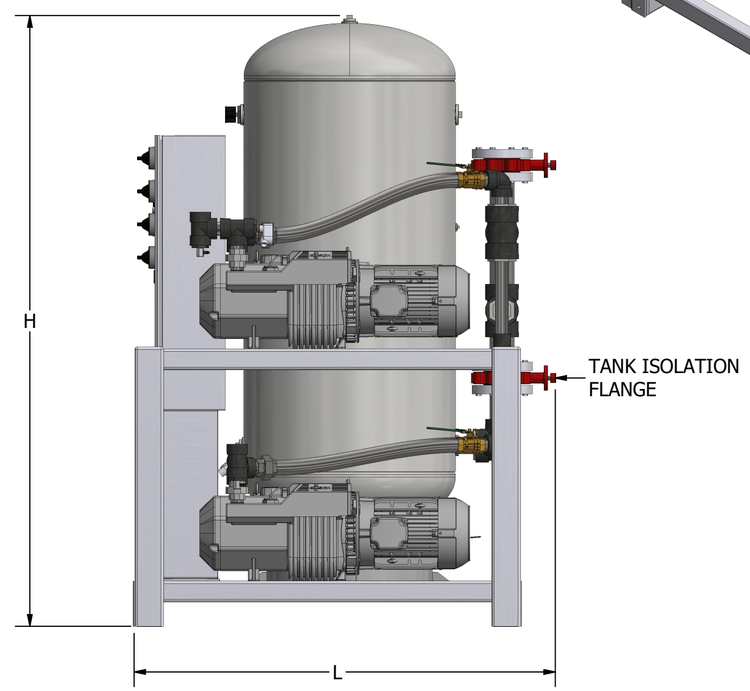

DIMENSIONS SUBJECT TO CHANGE WITHOUT NOTICE

*SYSTEM CONFIGURATION DIFFERS FROM MODEL SHOWN

**380 VOLT DATA PROVIDED AT 50HZ
ALL OTHER VOLTAGES ARE RATED AT 60HZ

ADDITIONAL MODELS AVAILABLE UPON REQUEST

MODEL	HP (kW)	A INLET NPT	B OUTLET NPT	TANK SIZE GALLON (LITRE)	PUMP SCFM @ 19" HG (LPM)		NFPA SYSTEM CAPACITIES WITH ONE COMPRESSOR ON STANDBY @ 19" HG (LPM)		WEIGHT IN LBS (KG)	SQ. FT. REQUIRED (M²)	SYSTEM FLA (WITH ALL PUMPS RUNNING)				SYSTEM BTU/HR	SOUND LEVEL dB (A)	W (M)	L (M)	H (M)
					50 Hz Motor	60 Hz Motor	50 Hz Motor	60 Hz Motor			208V	230V	380V**	460V					
V-RVD-Q-200P-SS-N-012*	1.2 (0.89)	1.25	1.0	200 (757)	4.4 (125)	5.3 (150)	13.2 (374)	15.9 (450)	1956 (887)	38.6 (3.60)	25	24	14	13	9,159	71	101 (2.57)	55 (1.40)	91 (2.31)
V-RVD-Q-200P-SS-N-017*	1.7 (1.27)	1.25	1.0	200 (757)	6.7 (190)	8.0 (227)	20.1 (569)	24.0 (680)	2064 (936)	38.6 (3.60)	32	30	15	15	12,978	75	101 (2.57)	55 (1.40)	91 (2.31)
V-RVD-Q-200P-SS-N-032*	3.2 (2.39)	2.0	1.25	200 (757)	11.3 (320)	13.5 (382)	33.9 (960)	40.5 (1147)	2464 (1118)	38.6 (3.60)	40	37	18	18	24,426	81	101 (2.57)	55 (1.40)	91 (2.31)
V-RVD-Q-200P-SS-N-046*	4.6 (3.43)	2.0	1.25	200 (757)	14.2 (402)	17.0 (481)	42.6 (1206)	51.0 (1444)	2512 (1139)	38.6 (3.60)	58	54	26	27	35,112	82	101 (2.57)	55 (1.40)	91 (2.31)
V-RVD-Q-200P-SS-N-056*	5.6 (4.18)	2.0	1.25	200 (757)	17.5 (496)	21.0 (595)	52.5 (1487)	63.0 (1784)	2808 (1274)	38.6 (3.60)	67	63	35	32	42,747	81	101 (2.57)	55 (1.40)	91 (2.31)
V-RVD-Q-200P-SS-N-089	8.9 (6.64)	3.0	1.5	200 (757)	23.3 (660)	28.0 (793)	69.9 (1979)	84.0 (2379)	2944 (1335)	45.6 (4.24)	102	99	50	50	67,935	82	101 (2.57)	65 (1.65)	91 (2.31)

Amico
600 Prime Place, Hauppauge
NY 11788, USA
Direct Tel: 905.764.0800
Tel: 1.877.462.6426
Fax: 1.866.440.4986